US011486448B2

(12) **United States Patent**
Miller

(10) **Patent No.: US 11,486,448 B2**
(45) **Date of Patent: Nov. 1, 2022**

(54) **HUB AND SECONDARY DRIVING ELEMENT SHAFT LOCKING SYSTEM**

(71) Applicant: **Western Diesel Services, Inc.**, Fife Lake, MI (US)

(72) Inventor: **Jeffery Miller**, Fife Lake, MI (US)

(73) Assignee: **Western Diesel Services, Inc.**, Fife Lake, MI (US)

(*) Notice: Subject to any disclaimer, the term of this patent is extended or adjusted under 35 U.S.C. 154(b) by 6 days.

(21) Appl. No.: **17/199,693**

(22) Filed: **Mar. 12, 2021**

(65) **Prior Publication Data**

US 2021/0301878 A1 Sep. 30, 2021

Related U.S. Application Data

(60) Provisional application No. 63/000,678, filed on Mar. 27, 2020.

(51) **Int. Cl.**
F16D 1/08 (2006.01)

(52) **U.S. Cl.**
CPC ***F16D 1/0847*** (2013.01); *Y10T 403/7033* (2015.01); *Y10T 403/7041* (2015.01)

(58) **Field of Classification Search**
CPC F16B 2/065; F16B 21/16; F16B 35/005; F16B 35/04; F16B 35/044; F16D 1/0847; F16D 1/104; F16D 2001/062; F16D 2001/103; Y10T 403/68; Y10T 403/7033; Y10T 403/7041; Y10T 403/7067
USPC 403/343, 359.5, 362, 374.3; 464/182
See application file for complete search history.

(56) **References Cited**

U.S. PATENT DOCUMENTS

1,269,971	A *	6/1918	Smith	F16B 35/005	81/461
2,382,019	A *	8/1945	Miller	F16B 35/047	411/386
2,462,910	A *	3/1949	Simmons	F16B 35/005	403/362
2,856,617	A *	10/1958	Widmann	F16B 35/005	72/368
3,143,029	A *	8/1964	Brown	F16B 35/005	411/393
5,228,798	A *	7/1993	Tzanovici	E05B 3/04	403/362
7,645,089	B2 *	1/2010	Hayes	F16D 1/0847	403/359.5
8,083,453	B2 *	12/2011	Totsu	F16B 35/044	411/386
8,992,114	B2 *	3/2015	Ajanovic	F16B 12/2063	403/362
9,358,616	B2 *	6/2016	Spors	B23B 31/1077	

FOREIGN PATENT DOCUMENTS

DE	3611251 A1 *	10/1987	F16B 35/005	
EP	0071556 A *	2/1983	F16D 1/0847	
GB	912088 A *	12/1962	F16B 35/005	

* cited by examiner

Primary Examiner — Josh Skroupa
(74) *Attorney, Agent, or Firm* — Thompson Coburn LLP

(57) **ABSTRACT**

A drive hub includes a body and lugs that extend radially from the body and are engageable with a primemover of a primary power source. The lugs have a fastening lug that includes a radially extending bore. A hybrid, single piece setscrew extends within the bore and has a hemispherical portion configured to apply pressure to engage the drive hub to a shaft of a secondary power source.

17 Claims, 6 Drawing Sheets

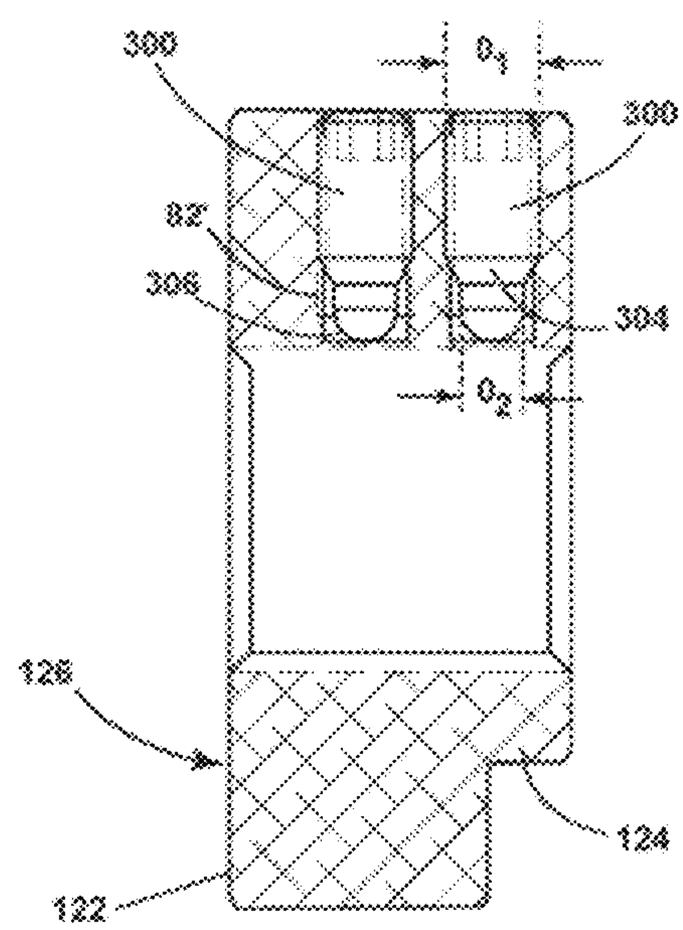

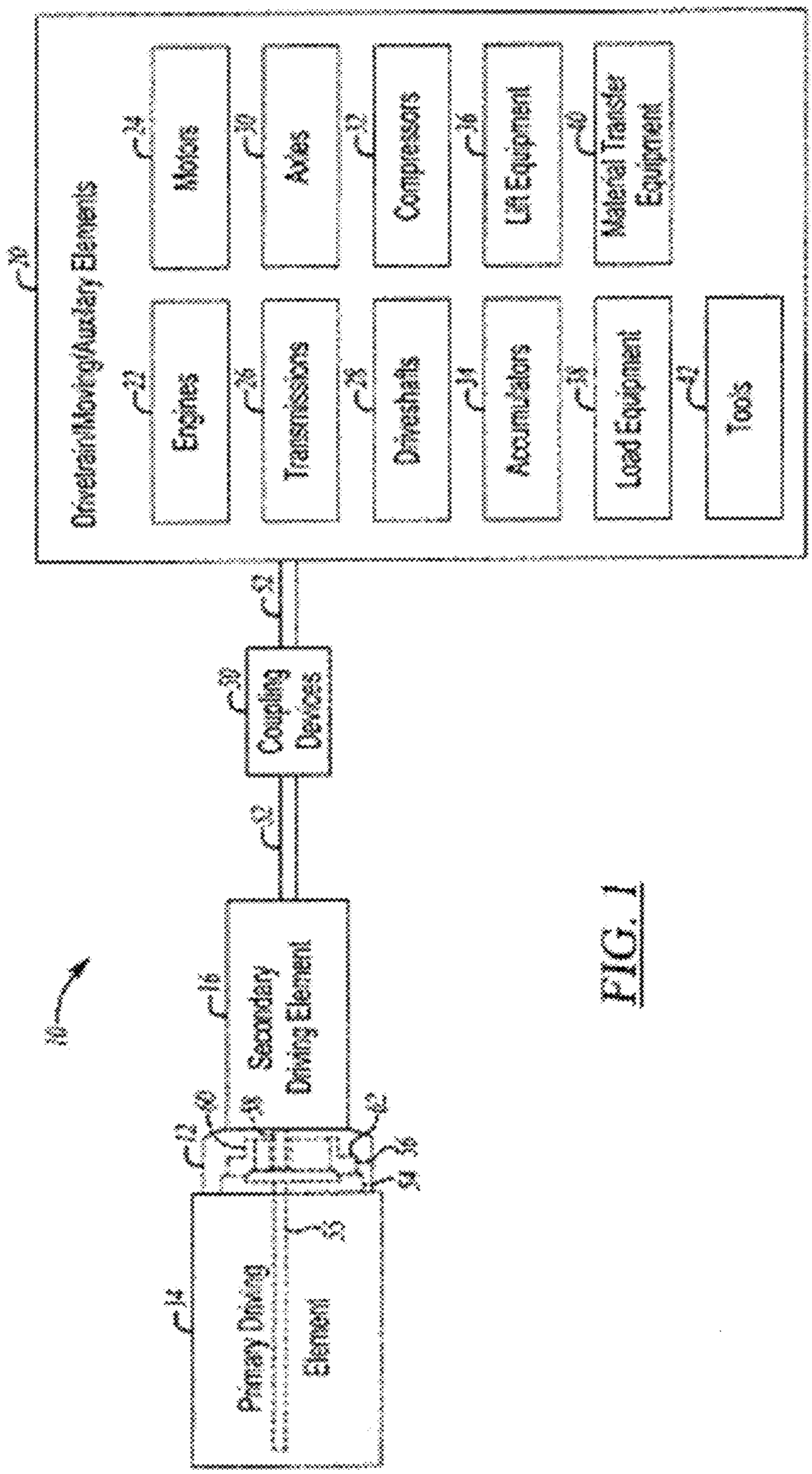
Primary Driving Element
Secondary Driving Element
Coupling Devices
Drive/Moving/Auxiliary Elements
Engines
Transmissions
Driveshafts
Accumulators
Load Equipment
Tools
Motors
Axles
Compressors
Lift Equipment
Material Transfer Equipment

FIG. 1

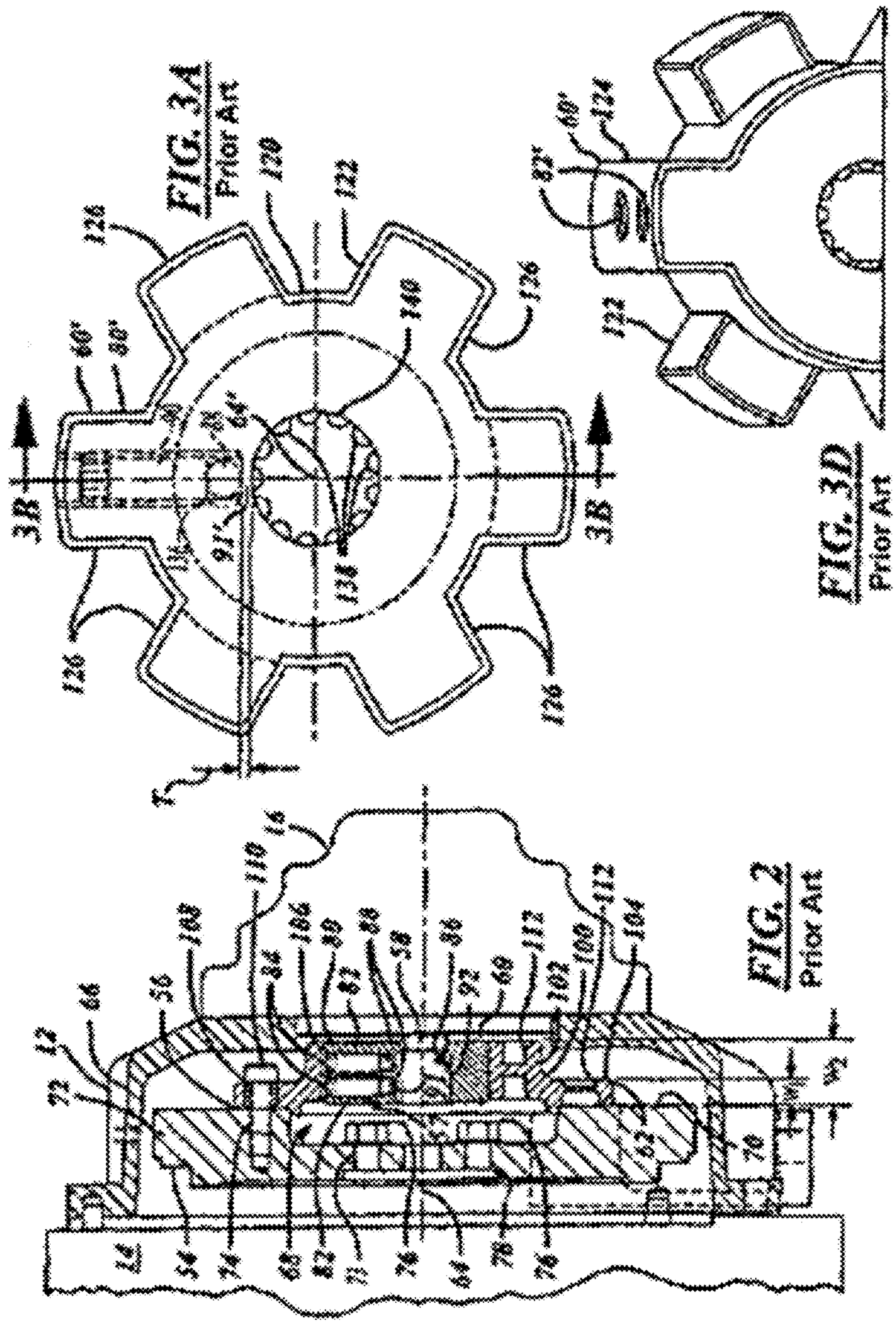
FIG. 3A
Prior Art
FIG. 3D
Prior Art
FIG. 2
Prior Art
3B
3B
120
122
126
140
126
124
124
126
126
138
T
T
110
16
108
106
56
66
12
72
24
54
74
68
82
78
76
64
78
70
62
70
92
60
112
102
100
114
104
T
W

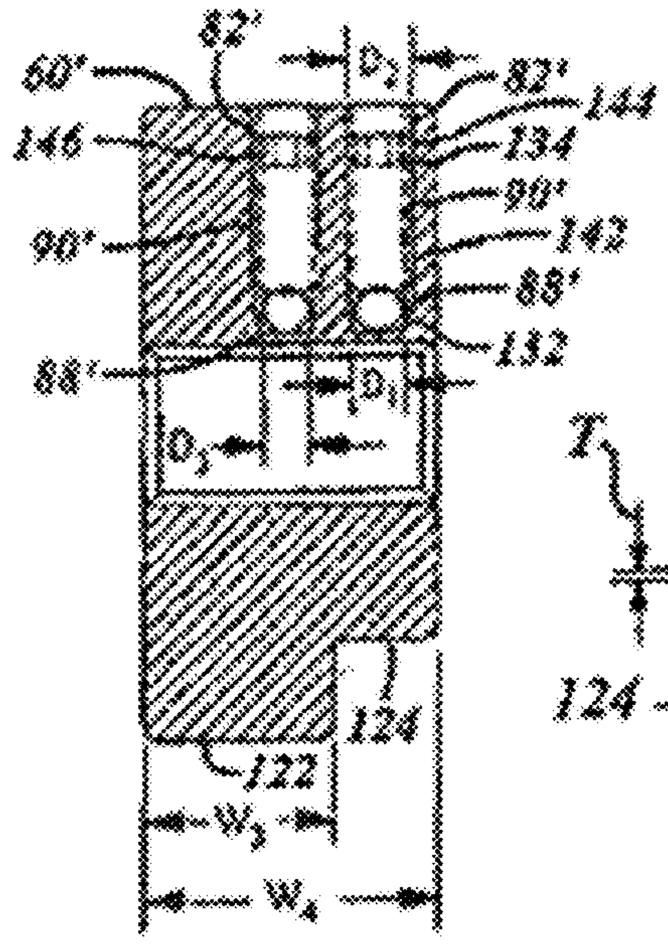

FIG. 3B
Prior Art

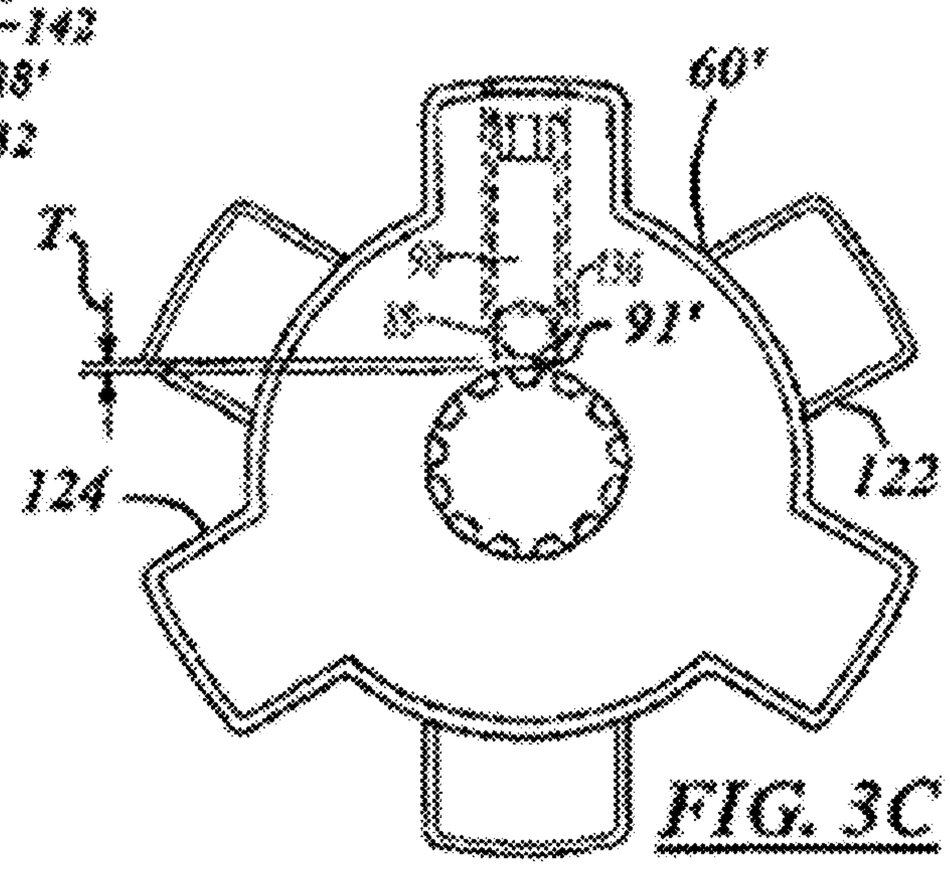

FIG. 3C
Prior Art

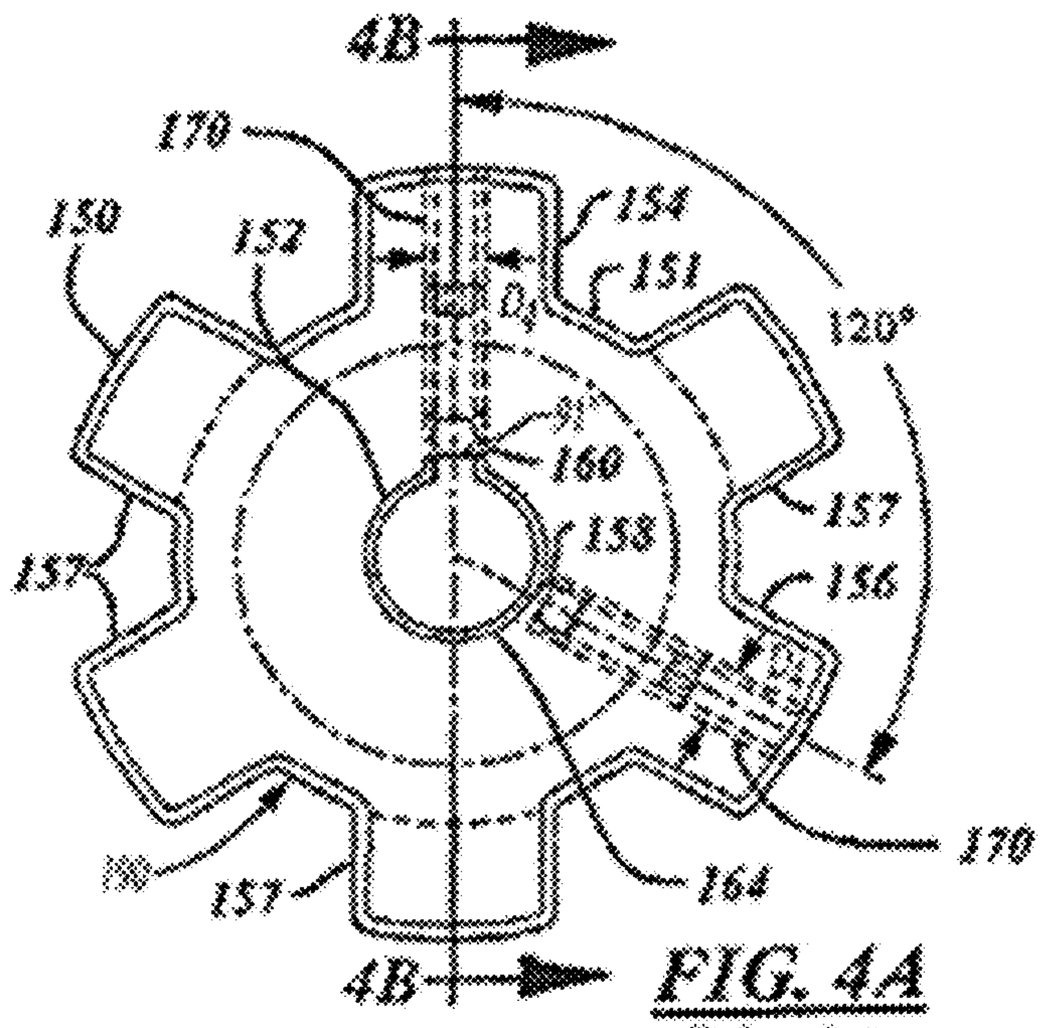

FIG. 4A
Prior Art

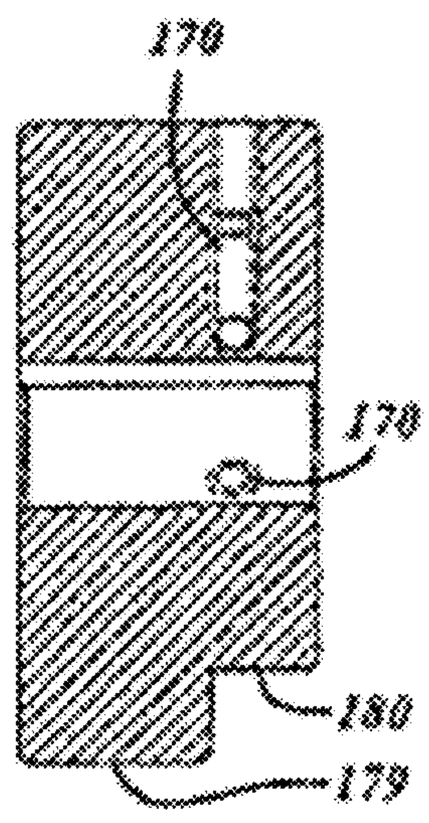

FIG. 4B
Prior Art

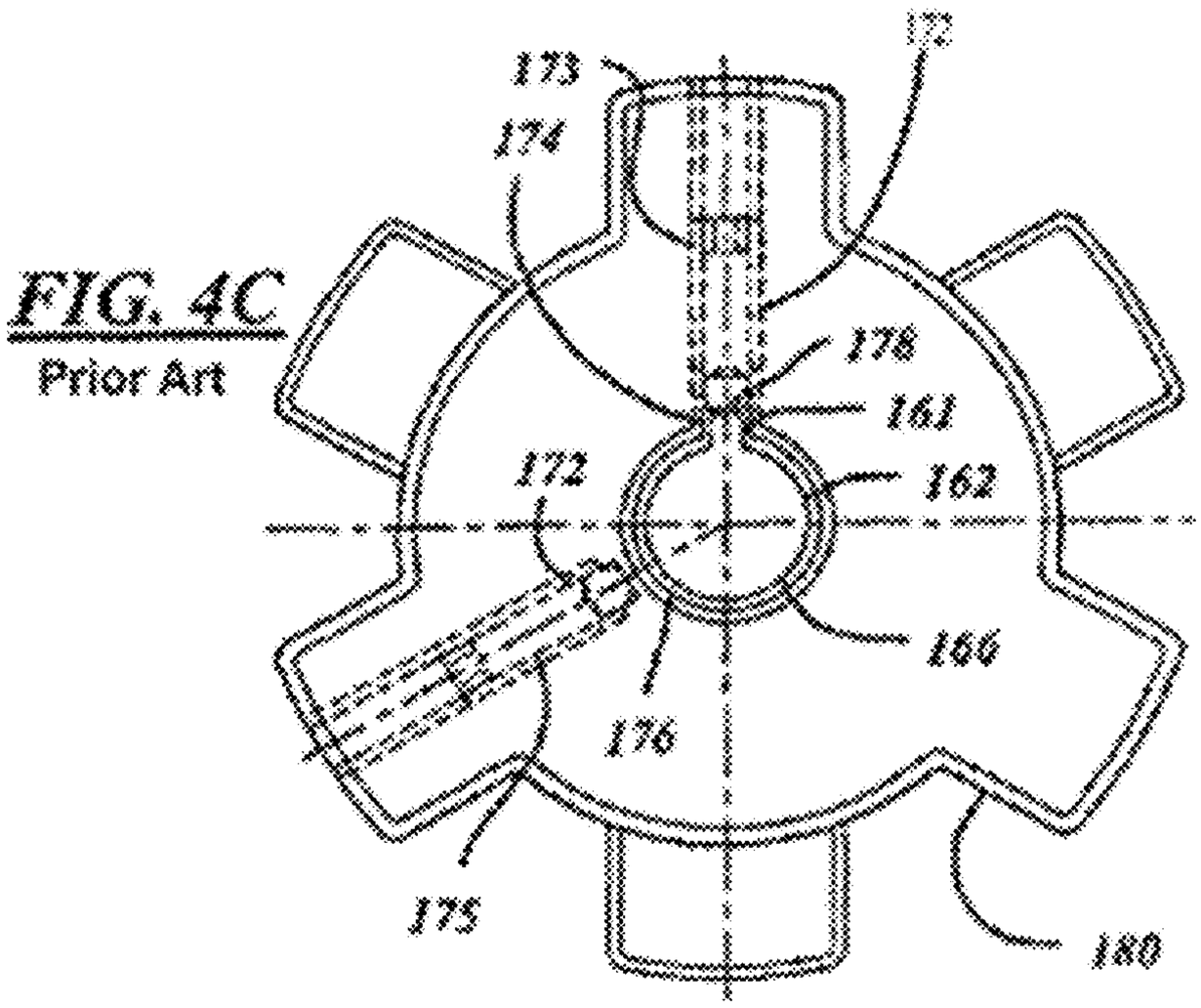

FIG. 4C
Prior Art

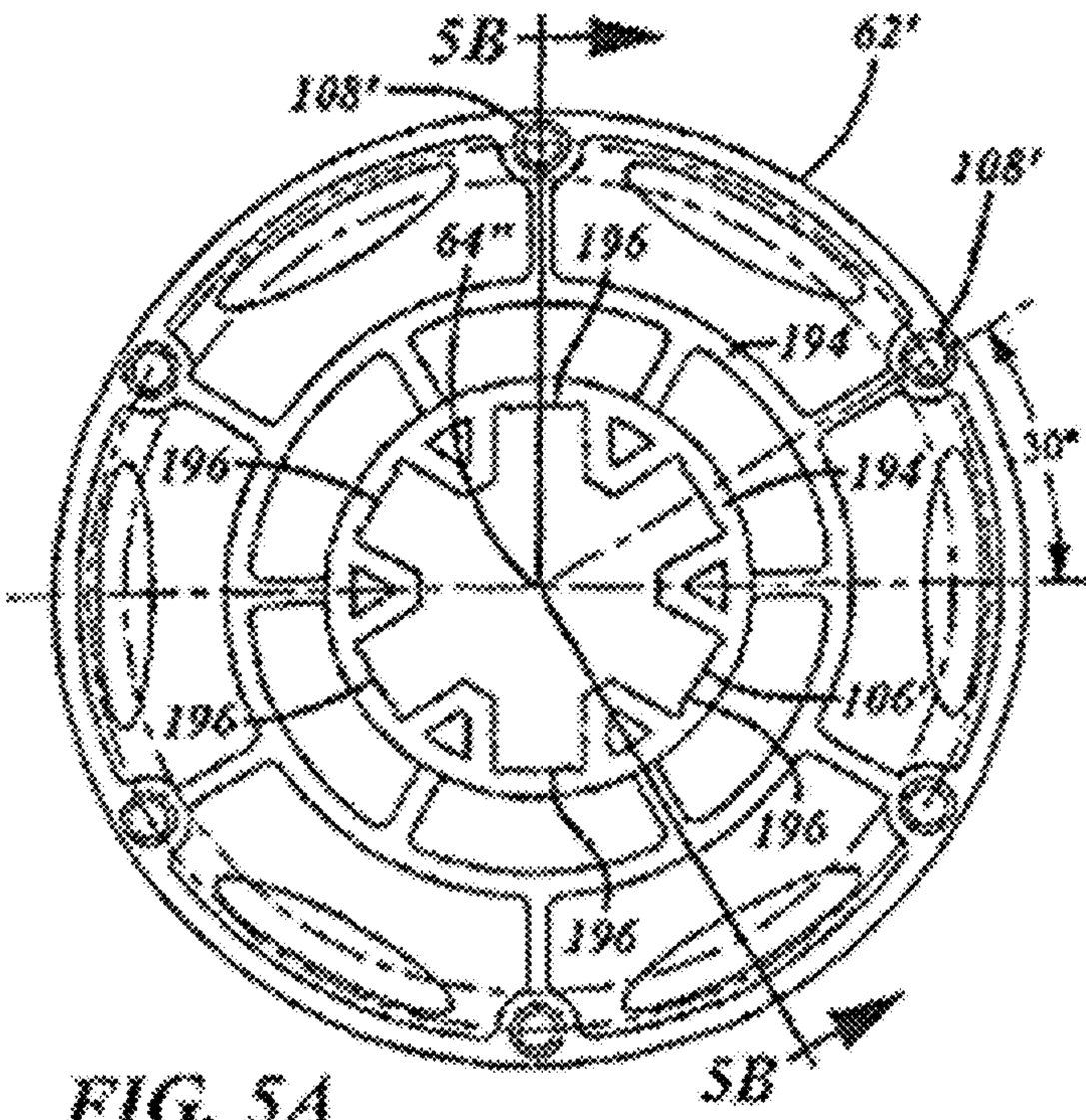

FIG. 5A

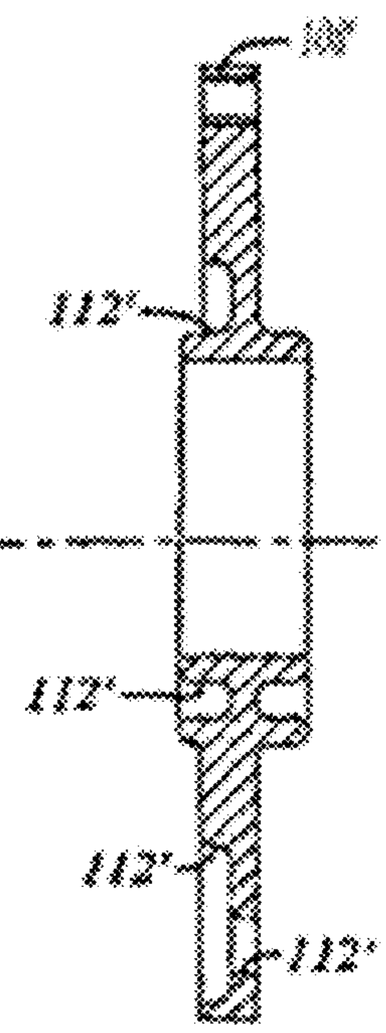

FIG. 5B

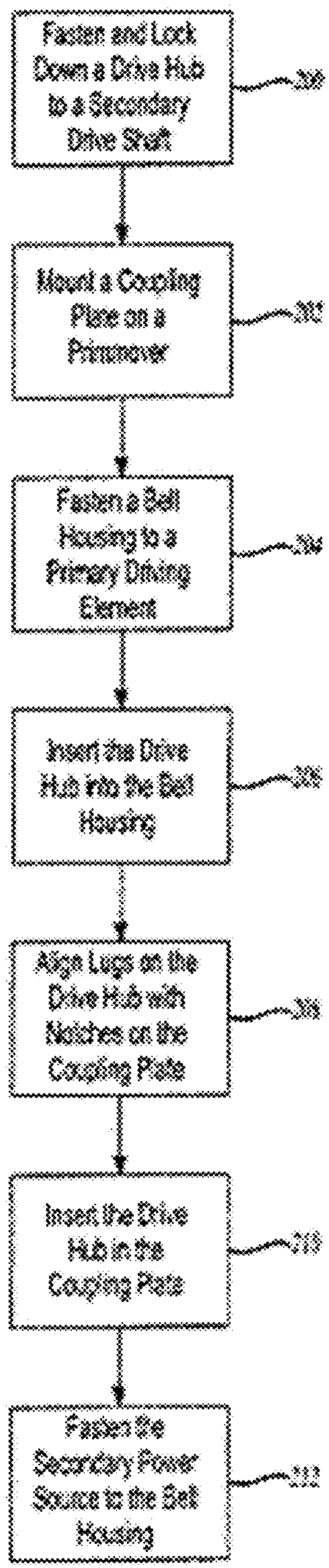
Fasten and Lock Down a Drive Hub to a Secondary Drive Shaft
Mount a Coupling Plate on a Primemover
Fasten a Bell Housing to a Primary Driving Element
Insert the Drive Hub into the Bell Housing
Align Lugs on the Drive Hub with Notches on the Coupling Plate
Insert the Drive Hub in the Coupling Plate
Fasten the Secondary Power Source to the Bell Housing

FIG. 6

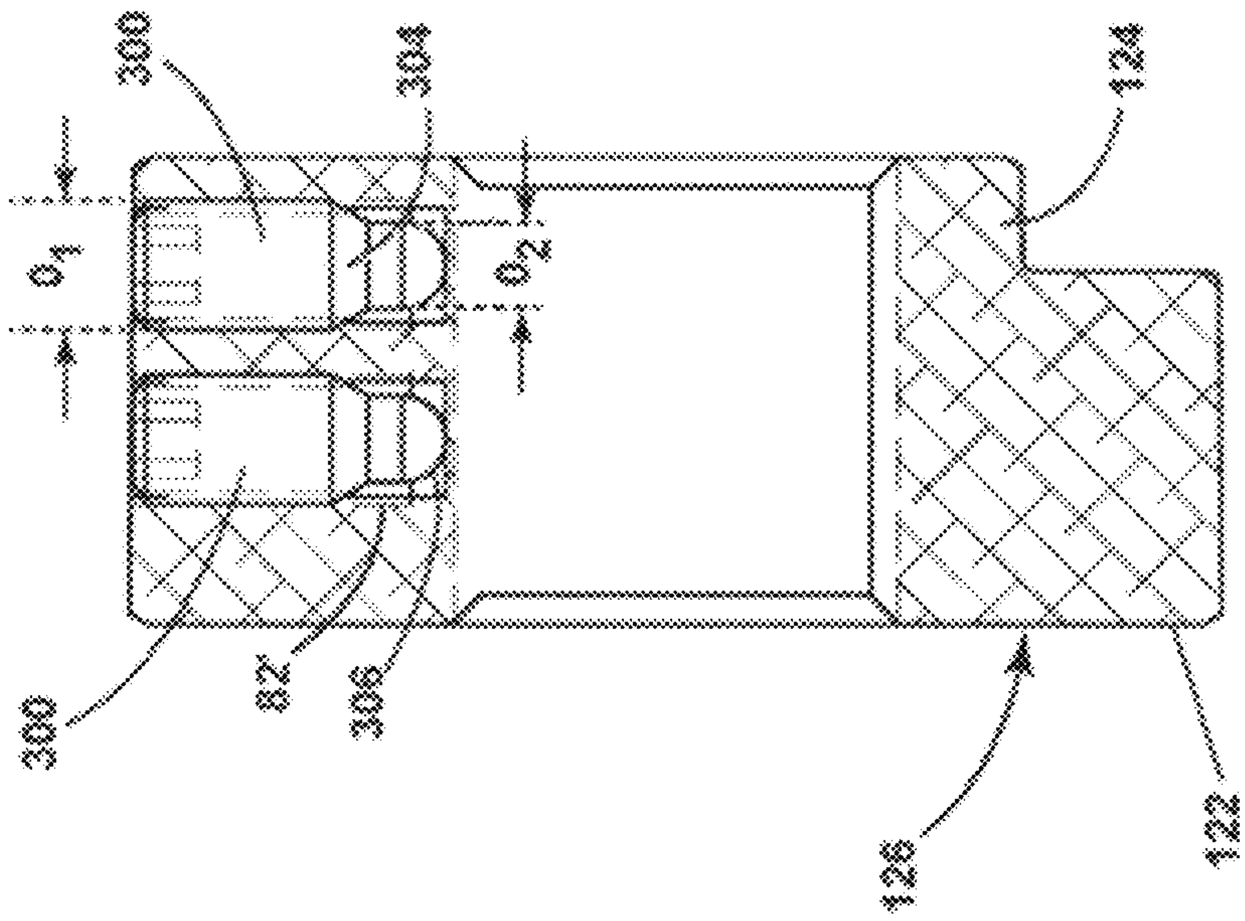

FIG. 7B

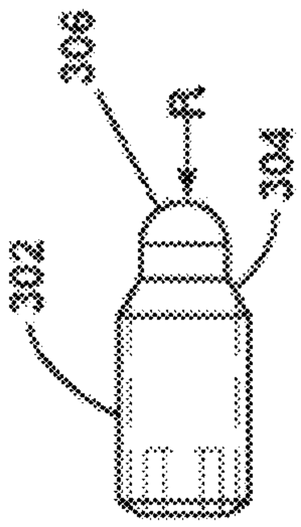

FIG. 8

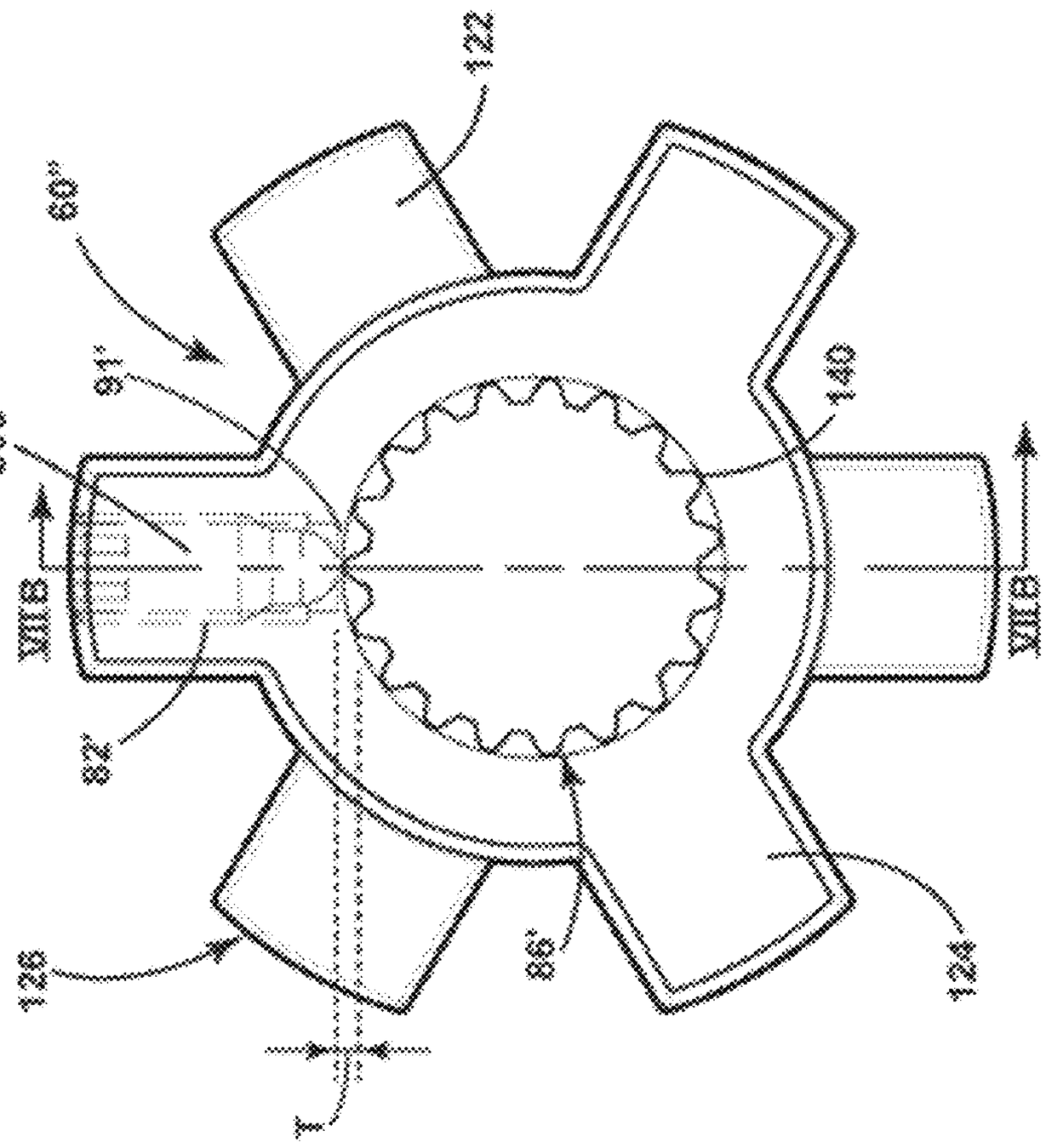

FIG. 7A

HUB AND SECONDARY DRIVING ELEMENT SHAFT LOCKING SYSTEM

RELATED APPLICATIONS

This application claims the benefit of U.S. Application No. 63/000,678 filed Mar. 27, 2020, the whole of which is incorporated herein.

TECHNICAL FIELD

The present invention relates to flywheel coupling mechanisms, shaft locking mechanisms, and auxiliary driving systems. More particularly, the present invention is related to a coupling hub and locking it to a shaft, which is driven by a flywheel or primemover.

BACKGROUND OF THE INVENTION

In applications where a transmission, a motor, a pump, or other downstream power conversion/transfer medium or secondary power source is utilized, a flywheel coupling mechanism is often incorporated. The flywheel coupling mechanism is typically used as an adaptor between a primary engine and a shaft of an acted upon secondary power source. Rotational energy from the primary engine is transferred through the flywheel to drive the shaft.

Auxiliary drive systems also utilize a similar flywheel coupling mechanism. The auxiliary drive systems are commonly found on off highway, construction, and commercial vehicles for non-transportation purposes. The auxiliary drive systems typically include an auxiliary engine, which is mounted on a vehicle, separate from a primary drive engine, and is used to drive auxiliary pumps, motors, or other equipment. For example, some auxiliary drive systems are used as bucket lifts, cargo lifts, loaders/unloaders, tools, and equipment or material transfer devices.

There are several types of flywheel coupling mechanisms, such as split type couplings and three hole bore operational couplings. Although prior flywheel coupling mechanisms provide for the attachment of a flywheel to a shaft of a secondary power source, they are limited in their ability to lock and maintain a fixed rigid union therebetween. Over time and use, the flywheel coupling mechanisms tend to loosen, allowing components thereof to shift or slide along the shaft. This movement of the flywheel coupling components can result in the disengagement of the shaft relative to the flywheel, thereby, rendering the system inoperable.

A known solution is found in U.S. Pat. No. 7,645,089 issued Jan. 12, 2010. It has been found to be labor intensive to track the set screws and the balls or bearings in assembling the shaft locking system. There is need to ensure the effectiveness and reliability of each shaft locking system in a drive coupling hub.

SUMMARY OF THE INVENTION

In one aspect of the invention, a drive coupling hub is provided for engagement with a shaft of a secondary power source to transfer energy from a primary driving element. The drive coupling includes a body portion having an inner periphery engageable with the shaft of the secondary power source. The body portion is intended to communicate with a primary driving element to effectuate rotation thereof. A radially extending bore is formed in the body portion, and has an end spaced from the inner periphery by a separation wall. At least one single piece hybrid setscrew extends within the radially extending bore, and has a bearing portion that applies pressure to the separation wall, and to the shaft of the secondary power source that is received within the inner periphery to effectuate constant engagement between the hub and the shaft.

BRIEF DESCRIPTION OF THE DRAWINGS

For a more complete understanding of this invention reference should now be had to the embodiments illustrated in greater detail in the accompanying figures and described below by way of examples of the invention wherein:

FIG. **1** is a block diagrammatic view of a drive system of the type incorporating a primemover/shaft coupling assembly in accordance with an embodiment of the present invention;

FIG. **2** is a side cross-sectional view of a primemover/shaft coupling assembly incorporating a drive coupling adaptor with a prior art shaft locking system;

FIG. **3**A is a back view of a splined drive hub with the prior art shaft locking system;

FIG. **3**B is a side cross-sectional view of the prior art splined drive hub of FIG. **3**A through section line **3**B-**3**B;

FIG. **3**C is a front view of the prior art splined drive hub of FIG. **3**A;

FIG. **3**D is a perspective view of the prior art splined drive hub of FIG. **3**A;

FIG. **4**A is a back view of a keyed drive hub with a prior art shaft locking system;

FIG. **4**B is a side cross-sectional view of the prior art keyed drive hub of FIG. **4**A through section line **4**B-**4**B;

FIG. **4**C is a front view of the prior art keyed drive hub of FIG. **4**A;

FIG. **5**A is a front view of a coupling plate of the type used in a primemover/shaft coupling assembly;

FIG. **5**B is a side cross-sectional view of the coupling plate of FIG. **5**A through section line **5**B-**5**B;

FIG. **6** is a logic flow diagram illustrating a sample method of assembling and installing a primemover/shaft coupling assembly of the type incorporating an embodiment of the present invention.

FIG. **7**A is a front view of a splined drive hub with a shaft locking system in accordance with the present invention.

FIG. **7**B is side cross-sectional view of the splined drive hub of FIG. **7**A through section line **7**B-**7**B;

FIG. **8** is a side view of the hybrid setscrew in the shaft locking system of FIGS. **7**A and **7**B.

DETAILED DESCRIPTION

In the following figures the same reference numerals will be used to refer to the same components. While the present invention is described primarily with respect to a drive system that utilizes a coupling adaptor for the transfer of energy from a flywheel or primemover of an engine to a shaft of a secondary power source, the present invention may be applied in and to various applications. The present invention may be utilized in association with various vehicle and non-vehicle applications. The present invention may apply to automotive, aeronautical, nautical, and railway industries, as well as to other industries that utilize energy transfer couplings between a flywheel or primemover and an acted upon shaft. The present invention may be applied to commercial and to non-commercial applications. Also, a variety of other embodiments are contemplated having different combinations of the below described features of the present invention, having features other than those described

herein, or even lacking one or more of those features. As such, it is understood that the invention can be carried out in various other suitable modes.

In the following description, various operating parameters and components are described for one constructed embodiment. These specific parameters and components are included as examples and are not meant to be limiting.

Also, in the following description the term "lug" refers to a radially extending or protruding portion of a hub body. A lug is generally rectangular in shape with significant width. A lug does not refer to spiked or triangularly-shaped teeth that are adjacently placed about a cylindrical object to form a gear or spline. Lugs are generally spaced apart from each other on a body, are less numerous, and are used in different applications than gear teeth or spline teeth.

Referring now to FIG. **1**, a block diagrammatic view of a drive system **10** incorporating a primemover/shaft coupling and housing assembly **12** in accordance with an embodiment of the present invention is shown. The drive system **10** includes a primary driving element **14**, which drives a secondary driving element **16** via the primemover/shaft coupling assembly **12**. The primary driving element **14** and the secondary driving element **16** may be of various types and styles. The primary driving element **14** performs as the original or initial power source and may be in the form of an engine, a combustion engine, an electric motor, a hydraulic motor, a hybrid engine, or in some other form known in the art. The secondary driving source **16** is acted upon by the primary driving element **14** and may also be in the form of a variety of engines or motors, as well as a variety of hydraulic or pneumatic pumps, transmissions, or other secondary power sources or power transfer mediums. In one embodiment of the present invention, the primary driving element **14** is in the form of a combustion engine and the secondary driving element **16** is in the form of a hydraulic pump.

The secondary driving element **16** may be mechanical, electrical, hydraulic, or pneumatic in form or a combination thereof. The secondary driving element **16** may be coupled to and/or incorporated into one or more devices, components, or systems, such as drivetrain elements, vehicle moving elements, auxiliary elements, or the like, which are represented by box **20**. The stated drivetrain/moving/auxiliary elements **20** may include engines **22**, motors **24**, transmissions **26**, drive shafts **28**, axles **30**, compressors **32**, accumulators **34**, lift equipment **36**, loading equipment **38**, material transfer equipment **40**, tools **42**, and other known devices from which power is received from a secondary source of energy. The secondary driving element **16** may be coupled to the drivetrain/moving/auxiliary elements **20** via one or more various known coupling devices, such as hydraulic hoses, air lines, drive shafts, linkages, transfer cases, and unions, which are represented by items, as generally provided by box **50** and lines **52**.

The primemover/shaft coupling assembly **12** includes a flywheel or primemover **54**, a two-piece drive coupling adaptor **56**, and a secondary driving element shaft or secondary driven shaft **58**, which are coupled in series. The drive coupling adaptor **56** attaches the secondary shaft **58** to the primemover **54**. The drive coupling adaptor **56** transfers rotational energy from the primemover **54** to the secondary shaft **58**. The primemover **54** is coupled to the primary driving element **14**. The primemover **54** may be mounted on or attached to a crankshaft or other rotating member **55** of the primary driving element **14**. The secondary shaft **58** is the driving shaft of the secondary driving element **16**.

The drive coupling adaptor **56** includes a drive coupling hub **60**, referred to herein as a drive hub **60**, and a coupling plate **62**. The drive hub **60** is mounted on the secondary shaft **58** and is disposed within and engages with the coupling plate **62**. The coupling plate **62** is mounted on the primemover **54**. This is described in further detail below.

Referring now to FIG. **2**, a side cross-sectional view of the primemover/shaft coupling assembly **12** incorporating the drive coupling adaptor **56** with a prior art shaft locking system **57** is shown. The primemover/shaft assembly **12** includes the primemover **54**, the drive coupling adaptor **56**, and the secondary driven shaft **58**, as similarly described above. The primemover **54**, the drive coupling adaptor **56**, and the secondary driven shaft **58** rotate about a longitudinal axis **64** within a bell housing **66**, which is sometimes referred to as a pump mount plate, depending upon the application and the secondary driving element incorporated. The secondary driving element **16** is mounted on the bell housing **66**. Although not shown, the secondary driving element **16** may be attached to the bell housing **66** via threaded fasteners or other suitable fasteners known in the art. The bell housing **66** may contain a cooling or viscous lubricating fluid.

The primemover **54** is circular in shape and has an inner recessed section **68** and an outer ring section **72**. The recessed section **68** is also circular in shape, is on a front side **70** of the primemover **54**, and defines the inner dimensions of the outer ring **72**. The primemover **54** has a first inner set of holes **73**, which are located in the recessed section **68**, and a second outer set of holes **74**, which are located on the outer ring **72**. Primary fasteners **76** extend within and through the first set of holes **73** and thread into a crankshaft base **78** of the primary driving element **14**. The second set of holes **74** are used for attachment of the drive coupling adaptor **56** to the primemover **54**. The primemover **54** may take on other configurations as will be understood by one of skill in the art.

The drive coupling adaptor **56** includes the drive hub **60** and the coupling plate **62**. The drive hub **60** includes a fastening lug **80** and non-fastening lugs (although not shown, similar non-fastening lugs are shown in FIGS. **3**A, **3**C, **3**D). The fastening lug **80** has the prior art shaft locking system **57**, which includes a pair of holes or bores **82**, with a pair of balls or bearings **88** and setscrews **90** therein. The shaft locking system **57** has a pre-locked state and an engaged or locked state. The shaft locking system **57** is shown in the pre-locked state. The pre-locked state refers to when the bearings **88** and setscrews **90** are inserted within the bores **82**, but are not applying pressure on the spline of the drive hub **60** and the secondary shaft **58**, as when in the locked state. This is also the case with the other shaft locking systems. The bores **82** are formed within the fastening lug **80** and have a plurality of inlet openings **84**. The bores **82** extend radially outward from the secondary shaft **58** and perpendicular to the axis of rotation **64**. The drive hub **60** is designed such that the bores **82** are in-line with and over a predetermined or proper portion of the secondary shaft **58**. This portion, as will become more apparent in view of FIGS. **3**A-**4**C, is over a splined or keyed area **86** of the secondary shaft **58**. The bearings **88** are disposed within the bores **82** and are used to apply pressure on an inner circumferential separation wall **91**, which in turn applies pressure on the secondary shaft **58**. This alignment of the bores **82** along with the applied pressure on the bearings **88** on the secondary shaft **58**, assures that the coupling between the drive hub **60** and the secondary shaft **58** is maintained.

The separation wall is disposed between the bearings **88** and the splined area **86**, which includes a spline (the spline

is not called out, but a similar spline can be seen in FIGS. 3A, 3C, and 3D). Although the separation wall **91** is not required, its use can prevent damage to the secondary shaft **58**. The wall **91** may be integrally formed as part of the body **120** of the drive hub **60** or may be attached thereto. In one sample embodiment, the thickness T of the wall **91** is approximately 0.025 inches. The thickness T may vary per application.

In the embodiment shown, the setscrews **90** are threaded into the bores **82** and force the bearings **88** against a secondary shaft bore **92** of the drive hub **60**. This causes pressure to be applied on the secondary shaft **58**. The bearings **88** may be metallic and take on different sizes. Note that although two bores, two bearings, and two setscrews are shown; any number of each may be used and incorporated in one or more of the lugs. Also, each lug of the drive hub **60** may contain one or more of the bores, bearings, and setscrews. The setscrews may be fine or coarse threaded. Also, note that one skilled in the art may envision other modified configurations of that disclosed herein, which apply force on the spline and secondary shaft **58** without the use of bearings and/or setscrews and at the same time preventing damage to the spline and the secondary shaft **58**.

The primemover **54** includes an annular section **100**, with an inner portion **102** and an outer portion **104**, and an inner bore **106**. The outer portion **104** has a width W1 that is smaller than the width W2 of the inner portion **102**. The outer portion **104** has multiple primemover attachment points (only one is shown in FIG. **2**), which in the embodiment shown are in the form of primemover attachment holes **108**. Primemover fasteners **110** extend through the primemover attachment holes **108** and are threaded into the primemover **54**. The inner bore **106** is configured for reception of the drive hub **60**, which is disposed and engaged therein. To save on material costs and to minimize the weight of the coupling plate **62**, the coupling plate **62** may have cutout sections **112**, such as that shown in the inner portion **102** and the outer portion **104**.

Referring now to FIGS. **3A-3D**, a back view, a side cross-sectional view, a front view, and a perspective view of a splined drive hub **60'** are shown. The splined drive hub **60'** is in the form of a toothed wheel and has a generally circular body **120** with a back half **122** and a front half **124**. The back half **122** has six radially extending legs or lugs **126**, sometimes referred to as teeth, which extend from and are uniformly spaced around the periphery of the body **120**. Three of the lugs **126** are shared with the front half **124**. In the embodiment shown, the lugs are at approximately 60° intervals about the center axis of rotation **64'**. The arrangement of the lugs **126** provides a symmetrical and balanced rotating drive hub. The width W3 of the back half **122** is smaller than the width W4 of the front half **124**. The reduced width of the back half **122** reduces the material costs and weight of the drive hub **60'**. Of course, any number of lugs may be used and their sizes, shapes, arrangements and locations may vary. Also, a drive hub may be formed and utilized in which the lugs are not uniformly positioned about the body thereof.

One or more of the lugs **126** are in the form of a fastening lug **80'**. The fastening lug **80'** includes one or more bores **82'**, bearings **88'**, and setscrews **90'** (two of each are shown). As shown, the lugs **126** may be in the back half **122** or the front half **124** or a combination thereof. The front half **124**, generally, refers to the half of a drive hub that is to be mounted closest to a secondary driving element. Although the bores **82'** are in-line with each other along and parallel to the center axis **64'**, which is parallel to the centerline of a secondary shaft (not shown in FIGS. **3A-3C**), they may be out of alignment with each other. The bores **82'** have spline sections **132** with first diameters D1 and setscrew sections **134** with second diameters D2. The bearings **88'** sit partially within each of the sections **132** and **134**, rest on the flat bottoms **136** of each separation wall **91'**, and are in-line with one of the teeth **138** of the spline **140**. Of course, when desired the bearings may not be in alignment with a single tooth of the spline **140**. The diameters D1 are larger than the diameter of the bearings D3 and smaller than the diameters D2 to allow the bearings **88'** to sit within the spline sections **132**. Each of the bearings **88'** disperses the forces applied over multiple teeth of the spline **140**.

The bores **82'** are threaded and receive the setscrews **90'**. The setscrews **90'** have bearing ends **142** and torque ends **144**. The bearing ends **142** are cupped or concaved shaped to correspond with the shape of the bearings **88'**. The torque ends **144** have recessed sections **146** to allow the insertion of a torque wrench for position adjustment of the setscrews **90'** within the bores **82'** and for applied pressure adjustment on the bearings **88'**.

The drive hub **60'** includes the spline **140**. The spline **140**, as with the lugs **126**, may be attached to or integrally formed as part of the body **120** to form a single unitary structure, as shown. The teeth **138** of the spline **140** correspond to and engage with a similar set of opposing teeth (not shown) on a secondary driven shaft, such as the shaft **58**. Due to the shape of the teeth **138**, the forces exerted thereon are dispersed onto multiple surfaces of the secondary driven shaft. This provides increased clamping force on the secondary driven shaft, which locks the spline **140** to the secondary driven shaft without causing permanent deformation to the secondary driven shaft, the drive hub **60'**, or the spline **140**.

The drive hub **60'** may be formed of a metallic material, such as steel, aluminum, titanium, or other suitable metallic or non-metallic material. The drive hub **60'** may be formed using a machining, sintering, drilling, cutting, molding, casting, or other manufacturing process known in the art.

Referring now to FIGS. **4A-4C**, a back view, a side cross-sectional view, and a front view of a keyed drive hub **150** are shown with the prior art shaft locking system. In the embodiment shown, the keyed drive hub **150** has a body **151** with keyed inner bore **152**, two fastening lugs **154** and **156**, and four non-fastening lugs **157**. The keyed inner bore **152** has a notched or keyed portion **160** that coincides with a key **161** on a secondary driven shaft **162**. The inner bore **152** also has a non-keyed portion **164** that is generally circular in shape, which coincides with the circumferential remainder **166** of the secondary driven shaft **162**.

Each of the two fastening lugs **154** and **156** includes one or more bores **170** (only one per each lug is shown). The bores **170** may be threaded and receive setscrews **172**, similar to the setscrews **90** and **90'**. The bores **170** have a single section with a single diameter D4. The bores **170** extend to the keyed portion **160** or to the non-keyed portion **164**. The setscrews **172** are screwed into the bores **170** to apply pressure on the keyed portion **160** and on the non-keyed portion **164**. The setscrews **172** may have flat ends or concave ends, such as the flat end **174** and the concave end **176**, to match the flat side **178** of the key **161** and the curved shape of the non-keyed portion **164**, respectively, Inner circumferential separation wall or walls **158** (only one is shown) may be incorporated between the setscrews **172** and the secondary driven shaft **162**. It the embodiment shown, a separation wall is not disposed between the key setscrew

173 and the key 161 and a separation wall is disposed between the shaft setscrew 175 and the secondary driven shaft 162.

In the embodiment shown, the drive hub 150 has a back half 179 and a front half 180. The bores 170 are located in the front half 180 of the drive hub 150 and are approximately 120° apart from each other. Of course, any number of bores may be utilized and the bores maybe located in any of the lugs 157 and in either of the halves 179 and 180. Note also that the bores 170 may extend frilly through the drive hub 150 into the keyed inner bore 152 as shown, or up to one of the walls 91". Thus, the setscrews 172 may be screwed into the keyed inner bore 152 and directly apply pressure on the secondary driven shaft 162 or may apply pressure on the walls 158, thereby, in directly applying pressure on the secondary driven shaft 162.

The keyed drive hub 150 may be formed of similar materials as the splined drive hub 60'. The keyed drive hub 150 may also be of various sizes, shapes, and styles, as well as have any number of lugs, bores, setscrews, keyed portions, and non-keyed portions. Also, for both the keyed drive hub 150 and the splined drive hub 60', fasteners other than the setscrews 90' and 172 may be used and they may extend within the bodies of the drive hubs in areas other than in alignment with and in the lugs thereof. For example, one or more fasteners (not shown) may extend radially through the body 190 of the drive hub 150, in the front half 180, and not within and between the lugs 157 such that the heads or exposed portions thereof are between and do not protrude radially outward away from the body 190 past the lugs 157.

Referring now to FIGS. 5A-5B, a front view and a side cross-sectional view of a coupling plate 62' are shown in accordance with an embodiment of the present invention. The coupling plate 62' is shown as a flat toroidally-shaped or annular disc with an inner bore 106'.

The coupling plate 62' has fastening points 108' that are shown as openings or holes, which allow for the extension of primemover fasteners therethrough. The coupling plate 62' also has cutouts 112' of varying size and shape, some of which are in the form of grooves 194. The cutouts 112' are uniformly dispersed about the coupling plate 62' to provide balance. The coupling plate 62' may take on a variety of shapes, sizes, and layouts. The coupling plate 62' may also be formed of metallic or non-metallic materials. In one embodiment, the plate is formed of plastic.

The inner bore 106' has multiple notches 196 that extend radially inward towards and are open to the inner bore 106'. The notches 196 are in the form of axial channels that extend longitudinally along and are uniformly arranged around the axis of rotation 64", and are inwardly open to the inner bore 106'. The notches 196 correspond in size and shape to and receive and engage with the lugs of a drive hub, such as the lugs 126, 154, 156, and 157. Thus, the number size and orientation of the notches 196 matches that of the associated lugs. The sizes and shapes of the lugs 126, 154, 156, and 157 and the notches 196 may vary per application.

Referring now to FIG. 6, a logic flow diagram illustrating a sample method of assembling and installing a primemover/shaft coupling assembly is shown.

In step 200, a drive hub, such as one of the drive hubs 60, 60', and 150 is fastened and locked down to a secondary driven shaft of a secondary driving element, as described above.

In step 202, a coupling plate, such as the coupling plate 62 and 62', is mounted onto a primemover. In step 204, an engine bell housing or pump mount plate, such as the bell housing 66, is placed over the primemover and the coupling plate and is fastened to a primary driving element.

In step 206, the drive hub with the secondary driven shaft attached thereto is inserted into the bell housing. In step 208, the lugs on the drive hub are aligned with the notches on the coupling plate. In step 210, the drive hub is inserted within the inner bore of the coupling plate. The lugs, such as the lugs 126, 154, 156, and 157, are inserted within the notches of the coupling plate, such as the notches 196. In step 212, the secondary power source is fastened to the bell housing or rigidly held thereto.

Referring now to FIGS. 7A and 7B, a side cross-sectional view and a front view of an alternate splined drive hub 60" are shown. The alternate splined drive hub 60" is identical to the splined drive hub 60' in FIGS. 3A-3D but for the bearings 88' and setscrews 90', which are replaced in the alternate splined drive hub 60" by a hybrid set screw 300. All other elements of the alternate splined drive hub 60" are identical to the splined drive hub 60' in FIGS. 3A-3D, and the reader is referred to the description of FIGS. 3A-3D for reference. Looking also at FIG. 8, it is shown that the hybrid set screw 300 comprises a threaded shank 302, a transition portion 304, and a bearing portion 306. The threaded shank 302 has a first diameter D1 sized to enable the threads to be screwed into the threaded setscrew section 134 of each bore 82. The transition portion 304 tapers to a diameter D2, less than the diameter D1, and which may be nominally less than the diameter of each spline section 132. Extending from the transition portion 304 at diameter D2 is the hemispherical bearing portion 306, preferably having a radius (R) of one half of diameter D2. Importantly, the threaded shank 302, the transition portion 304, and the bearing portion 306 are integral in that they are formed from a single piece of hardened material, such as a metal."

It will be understood that a single piece hybrid set screw is preferable to the multiple bearings and setscrews of the prior art. Without the bearing, which can easily be misplaced or lost during assembly, the set screw will not function as intended. Hence, additional time and labor are expended to ensure that each bore 82 contains the correct number of components. A single piece hybrid setscrew 300 makes the assembly process easier and less time and labor consuming.

While the invention has been described in connection with one or more embodiments, it is to be understood that the specific mechanisms and techniques which have been described are merely illustrative of the principles of the invention, numerous modifications may be made to the methods and apparatus described without departing from the spirit and scope of the invention as defined by the appended claims

What is claimed is:

1. A drive hub for engagement with a shaft of a secondary power source to transfer energy from a primary driving element, comprising:

a body portion having an inner periphery engageable with the shaft of the secondary power source, wherein the body portion is intended to communicate with a primary driving element to effectuate rotation thereof;

at least one radially extending bore formed in the body portion, and having an end spaced from the inner periphery by a separation wall; and

at least one single piece hybrid setscrew comprising a threaded shank having a first diameter, a transition portion extending from the threaded shank and tapering to a second diameter less than the first diameter, and a hemispherical bearing portion projecting outward from the transition portion, the hemispherical bearing por-

tion having a radius of one half the second diameter, the threaded shank, transition portion, and hemispherical bearing portion forming a single body from a single piece of material, the single piece hybrid setscrew extending within the at least one radially extending bore, and having a bearing portion that applies pressure to the separation wall, and to the shaft of the secondary power source that is received within the inner periphery to effectuate constant engagement between the drive hub and the shaft.

2. The drive hub of claim **1**, wherein the body portion includes a plurality of lugs that extend radially outward away from the inner periphery, each of the plurality of lugs being uniformly spaced from one another.

3. The drive hub of claim **2**, wherein the plurality of lugs comprises six symmetrically arranged lugs.

4. The drive hub of claim **2**, wherein the inner periphery of the body portion is splined.

5. The drive hub of claim **2**, wherein the at least one radially extending bore is formed in one of the plurality of lugs.

6. The drive hub of claim **5**, further comprising a plurality of radially extending bores in at least one of the plurality of lugs.

7. The drive hub of claim **5**, further comprising a second radially extending bore formed in another of the plurality of lugs.

8. The drive hub of claim **7**, further comprising a second single piece hybrid setscrew disposed in the second radially extending bore and having a bearing portion that applies pressure

to the separation wall, and to the shaft of the secondary power source that is received within the inner periphery to effectuate constant engagement between the drive hub and the shaft.

9. The drive hub of claim **2**, wherein the body portion includes a front half and a back half with each the plurality of lugs extending from at least the back half, while less than each of the plurality of lugs extend from the front half.

10. The drive hub of claim **1**, wherein the separation wall has a substantially flat inner surface.

11. A drive hub for engagement with a shaft of a secondary power source, comprising: a body portion having an inner periphery and an outer periphery, and comprising a plurality of uniformly spaced outwardly extending lugs;

the body portion being engageable with the shaft of the secondary power source to effectuate rotation thereof

at least one first radially extending bore formed in at least one of the plurality of uniformly spaced outwardly extending lugs, the at least one radially extending bore having an open end adjacent the outer periphery and a closed end adjacent the inner periphery, the closed end having a substantially flat bottom surface;

at least one second radially extending bore formed in the body portion, and having an end spaced from the inner periphery by a separation wall; and

at least one single piece hybrid setscrew comprising a threaded shank having a first diameter, a transition portion extending from the threaded shank and tapering to a second diameter less than the first diameter, and a hemispherical bearing portion projecting outward from the transition portion, the hemispherical bearing portion having a radius of one half of the second diameter, the threaded shank, transition portion, and hemispherical bearing portion forming a single body from a single piece of material, the single piece hybrid setscrew extending within the at least one first and second radially extending bores, and having a bearing portion that applies pressure to the separation wall, and to the shaft of the secondary power source that is received within the inner periphery to effectuate constant engagement between the hub and the shaft;

whereby the drive hub is securely engaged to the shaft while minimizing damage to the shaft.

12. The drive hub of claim **11**, wherein the plurality of lugs comprises six symmetrically arranged lugs.

13. The drive hub of claim **11**, wherein the inner periphery of the body portion is splined.

14. The drive hub of claim **11**, wherein the at least one radially extending bore is formed in one of the plurality of lugs.

15. The drive hub of claim **11**, further comprising a second radially extending bore formed in another of the plurality of lugs.

16. The drive hub of claim **11**, further comprising a second single piece hybrid setscrew disposed in the second radially extending bore and having a bearing portion that applies pressure to the separation wall, and to the shaft of the secondary power source that is received within the inner periphery to effectuate constant engagement between the drive hub and the shaft.

17. A hybrid set screw for a drive hub comprising:

a threaded shank having a first diameter;

a transition portion extending from the threaded shank and tapering to a second diameter less than the first diameter; and

a bearing portion extending from the transition portion and having the second diameter;

wherein the threaded shank, the transition portion, and the bearing portion form a single body from a single piece of material; and

wherein the bearing portion is hemispherical with a radius that is half of the second diameter.

* * * * *